Free Standard provided by BIS via BSB Edge Private Limited to Krupaben Brahmbhatt - SURAT(naikassociates110@gmail.com) 116.74.95.151.

IS : 1179 - 1967
(Reaffirmed 2003)
(Reaffirmed 2013)
(Reaffirmed 2019)

Indian Standard

SPECIFICATION FOR EQUIPMENT FOR EYE & FACE PROTECTION DURING WELDING

(*First Revision*)

Fourth Reprint JULY 1993
(Incorporating Amendment No. 1)

UDC 614·891/·893 ; 621·791

© *Copyright* 1978

BUREAU OF INDIAN STANDARDS
MANAK BHAVAN, 9 BAHADUR SHAH ZAFAR MARG
NEW DELHI-110002

Gr 5 *August* 1967

Free Standard provided by BIS via BSB Edge Private Limited to Krupaben Brahmbhatt - SURAT(naikassociates110@gmail.com) 116.74.95.151.

Indian Standard

SPECIFICATION FOR EQUIPMENT FOR EYE AND FACE PROTECTION DURING WELDING

(First Revision)

Welding General Sectional Committee, SMDC 14

Chairman	*Representing*
SHRI R. GHOSH	Indian Oxygen Ltd, Calcutta
Members	
SHRI J. K. AHLUWALIA	Stewarts & Lloyds of India Ltd, Calcutta
SHRI M. M. GHOSH (*Alternate*)	
SHRI F. V. BADAMI	Directorate General of Technical Development
SHRI N. C. BAGCHI	National Test House, Calcutta
SHRI D. P. CHATTERJEE	Directorate General of Supplies & Disposals (Inspection Wing), New Delhi
CHEMIST AND METALLURGIST	Integral Coach Factory, Perambur (Ministry of Railways)
SHRI B. N. DAS	National Metallurgical Laboratory (CSIR), Jamshedpur
DR N. D. DESAI	Power Cables Pvt Ltd, Bombay; *and* Indian Engineering Association, Calcutta
SHRI S. K. HARI (*Alternate*)	Indian Engineering Association, Calcutta
SHRI K. C. JERATH	Engineer-in-Chief's Branch, Army Headquarters
SHRI J. N. MALIK (*Alternate*)	
JOINT DIRECTOR RESEARCH (M & C), RDSO, CHITTARANJAN	Ministry of Railways
PRODUCTION ENGINEER (SHELL), ICF, PERAMBUR (*Alternate* I)	
DY DIRECTOR RESEARCH (MET) I, RDSO, CHITTARANJAN (*Alternate* II)	
SHRI T. V. MATHEW	Hindustan Steel Ltd, Ranchi
SHRI JAGMOHAN SINGH (*Alternate*)	
SHRI M. MITRA	Asiatic Oxygen & Acetylene Co Ltd, Calcutta
SHRI T. BISWAS (*Alternate*)	
SHRI S. V. NADKARNI	J.B. Advani-Oerlikon Electrodes (Pvt) Ltd, Bombay
PROF G. K. OGALE	Association of Principals of Technical Institutions (India), New Delhi
SHRI S. K. PATHAK	Braithwaite & Co (India) Ltd, Calcutta
COL S. G. PENDSE	Directorate General of Employment and Training, New Delhi

(*Continued on page* 2)

BUREAU OF INDIAN STANDARDS
MANAK BHAVAN, 9 BAHADUR SHAH ZAFAR MARG
NEW DELHI 110002

Free Standard provided by BIS via BSB Edge Private Limited to Krupaben Brahmbhatt - SURAT(naikassociates110@gmail.com) 116.74.95.151.

(*Continued from page* 1)

Members	*Representing*
SHRI K. G. K. RAO	Tata Engineering & Locomotive Co Ltd, Jamshedpur
SHRI D. V. REDDI SHRI M. K. SEN (*Alternate*)	Ministry of Defence (DGI)
SHRI D. K. ROY	Durgapur Steel Plant, Durgapur
SHRI S. C. ROY	Central Boilers Board, New Delhi
SHRI S. SHANMUGASUNDARAM	Public Works Department, Government of Madras
SHRI J. P. SINGLA EXECUTIVE ENGINEER (ELECTRICAL), CALCUTTA (*Alternate*)	Central Public Works Department
SHRI V. R. SUBRAMANIAN SHRI J. C. ACHARYA (*Alternate*)	Indian Oxygen Ltd, Calcutta
SHRI T. N. VELU	Hindustan Shipyard Ltd, Visakhapatnam
DR A. K. CHATTERJEE, Director (Struc & Met)	Director General, ISI (*Ex-officio Member*)

Secretary

SHRI M. S. NAGARAJ

Assistant Director (Struc & Met), ISI

Panel for Revision of IS : 1179-1957, SMDC 14/P-16

Convener	
SHRI S. V. SAMBAMURTI	Indian Oxygen Ltd, Calcutta
Members	
SHRI D. P. CHATTERJEE	Directorate General of Supplies and Disposals (Inspection wing), New Delhi
SHRI N. V. PANDIT	Central Mechanical Engineering Research Institute (CSIR), Durgapur

Free Standard provided by BIS via BSB Edge Private Limited to Krupaben Brahmbhatt - SURAT(naikassociates110@gmail.com) 116.74.95.151.

Indian Standard

SPECIFICATION FOR EQUIPMENT FOR EYE AND FACE PROTECTION DURING WELDING

(First Revision)

0. FOREWORD

0.1 This Indian Standard (First Revision) was adopted by the Indian Standards Institution on 26 June 1967, after the draft finalized by the Welding General Sectional Committee had been approved by the Structural and Metals Division Council.

0.2 This standard was first issued in 1957. Due to the developments that had taken place in the field of safety devices for protection of eye, ear, face and neck during welding and similar operations, from radiation and other hazards, it was decided to revise this standard incorporating these improvements.

0.3 The aspect of radiation has been specially considered and the protection to neck is also included.

0.4 No protective equipment is considered necessary for resistance welding except the use of industrial goggles. Recommendations regarding the upkeep of eye protection equipment and their services are given in Appendix A.

0.5 Special spectacles fitted with protective filters are also included as these are used by supervisory staff who are not actually engaged in welding. However, it is cautioned that it should not be used by welding operator as a protection against harmful radiation.

0.6 The filter size has been changed to 105 × 80 mm to give greater area opening. The need for screening welding operations, to avoid injury and distraction to others present in the shop floor, is also stressed. Portable screens of a fire resistant nature will meet with this need. It is not the intention to restrict the development of new forms of equipment which provide a satisfactory level of protection.

0.7 Assistance has been derived from the following publications:

A.S. No. B. 91-1951 Specification for protective filters against harmful radiations in welding and allied operations. Standards Association of Australia.

Free Standard provided by BIS via BSB Edge Private Limited to Krupaben Brahmbhatt - SURAT(naikassociates110@gmail.com) 116.74.95.151.

A.S. No. B.99-1951 Specification for helmets, hand shields, face masks and goggles for protection against harmful radiations in welding and allied operations. Standards Association of Australia.

A.S. No. CZ. 2-1951 Code of recommended practice for the protection of eyes against harmful radiations in welding and allied operations. Standards Association of Australia.

DIN 4655 : 1961 Shields and helmets to protect the eyes from intense rays of light sources and from mechanical injuries. Deutscher Normenausschuss.

B.S. 1542-1960 Equipment for eye, face and neck protection against radiation arising during welding and similar operations. British Standards Institution.

GGG - G - 513 Goggles, industrial, eyecup; and lenses, goggles, industrial. Federal Supply Service, USA.

GGG - H - 211a Helmet, welder's; and shield, welding, hand held. Federal Supply Service, USA.

0.8 For the purpose of deciding whether a particular requirement of this standard is complied with, the final value, observed or calculated, expressing the result of a test, shall be rounded off in accordance with IS : 2-1960*. The number of significant places retained in the rounded off value should be the same as that of the specified value in this standard.

1. SCOPE

1.0 This standard covers the requirements of goggles, hand shield and helmet intended to protect an operator above the shoulder, from harmful radiation, spark and particles of hot metal during welding, cutting and similar operations employing a gas flame or electric arc.

2. TERMINOLOGY

2.0 For the purpose of this standard, the following definitions shall apply.

2.1 Filter — The device through which the wearer of the equipment views the welding or cutting operation and which provides protection to the eyes against glare, injurious radiation, or sparks or hot particles of metal or a combination of these hazards.

2.2 Filter Cover — A transparent cover to protect the surface of the filter.

*Rules for rounding off numerical values (*revised*).

Free Standard provided by BIS via BSB Edge Private Limited to Krupaben Brahmbhatt - SURAT(naikassociates110@gmail.com) 116.74.95.151.

2.3 Goggles — A device worn over the eyes and held in place by a headband used for protecting the eyes and eye sockets from flying particles and injurious radiations.

2.4 Hand Shield — A device held in the hand and designed to give protection during welding and cutting to the eyes, ears, face, neck and part of the top of the head of the user.

2.5 Helmet — A device supported on the head and designed to give protection, during welding and cutting, to the eyes, ears, face, neck and part of the top of the head of the user.

3. PROTECTION REQUIREMENTS AND EQUIPMENT NECESSARY

3.1 For the purpose of this standard, operations in welding and cutting have been classified in the ascending order of the degree of hazard involved. Table 1 indicates the protection equipment permissible for each class of hazard.

TABLE 1 SELECTION OF EYE AND FACE PROTECTION EQUIPMENT

Hazard Involved	Permissible Equipment	Clause Reference
Direct exposure to moderate injurious radiation of light and heat and to sparks, for example, in gas welding and cutting	Goggles. Hand shields and helmets may also be used	6 and 7
Direct exposure to high intensity radiation of light and heat, sparks and particles of hot metal, for example, in electric arc welding and cutting	Hand shields or helmets	7
Exposure by direct radiation and by reflection to large amounts of infra red radiation, for example, in gas shielded metal arc welding and cutting	Helmets but with provision for auxiliary heat-absorbing filter as recommended in IS : 5983-1971*	7

*Specification for protective filters for welding, cutting and similar operations.

4. FILTERS

4.1 Filters used with the equipment shall meet the requirements of IS : 5983-1971* and be of the appropriate shade for the service for which they are intended.

*Specification for protective filters for welding, cutting and similar operations.

Free Standard provided by BIS via BSB Edge Private Limited to Krupaben Brahmbhatt - SURAT(naikassociates110@gmail.com) 116.74.95.151.

4.2 Filter covers used with the equipment shall meet the requirements of IS : 5983-1971*.

4.3 Sizes of filters and filter covers shall be one of those specified in **6.2.5** and **7.2.3.1**.

4.4 Filters and filter covers shall be capable of easy replacement without the use of special tools.

5. MATERIALS

5.1 Corrosion Resistance — Samples of all metallic materials except headbands and adjustable nose-bridges, used for the equipment, shall be subjected to the test given in Appendix B. At the end of the test, the materials shall on visual examination show no signs of roughening of the surface resulting from corrosion.

5.2 Disinfection — All materials shall be such as to withstand, without visible deterioration or discoloration, washing in detergents and warm water, rinsing to remove all traces of detergent and disinfection by immersion for 10 minutes in a solution of formalin made by placing one part of 40 per-cent formaldehyde solution in 9 parts of water at room temperature. The manufacturer may recommend alternative methods of disinfection in addition.

5.3 Skin Irritation — All materials which come into contact with the user's skin shall be of a kind which is known not to cause irritation.

5.4 Flammability — Specimen of any material, other than metal, used for the equipment (except headbands) when subjected to the test given in Appendix C shall not burn at a rate greater than 75 mm per minute.

5.5 Thermal Conductivity — All metals which are likely to be exposed to radiation during use and which come into contact with the operator shall have a thermal conductivity of not more than $0{\cdot}35 \times 10^{-3}$ cal cm/cm^2 deg C.

6. GOGGLES

6.1 General Requirements — The goggles shall consist of a frame, lens or lenses and a means of support such as an adjustable headband to retain the goggles in front of the eyes. The lens need not be of the same material as the frame or an integral part of the frame. The frame shall be opaque and the interior shall have a permanent dull, low reflecting finish. The edge of the frame in contact with the face shall be flared so as to prevent cutting of the face and shall have a surface free from roughness or irregularities which may cause discomfort.

---

*Specification for protective filters for welding, cutting and similar operations.

Free Standard provided by BIS via BSB Edge Private Limited to Krupaben Brahmbhatt - SURAT(naikassociates110@gmail.com) 116.74.95.151.

6.1.1 *Ventilation* — The interior of the goggles shall be ventilated in a manner to permit circulation of air. The ventilation openings shall be baffled to prevent the passage of intense stray light or any particles into the interior of the goggles.

6.1.2 *Workmanship* — The workmanship shall be such that the goggles when worn in the normal manner shall not allow direct entry of any particle or radiation to the interior.

6.2 Detailed Requirements

6.2.0 Goggles shall be of one of the following types:

a) Cup-type goggles, consisting of two eye-pieces adjustably connected across the nose; and

b) Box-type goggles, providing total enclosure of both the eyes and having separate filter holders or a single filter.

6.2.1 Materials used in manufacture of goggles shall conform to the requirements of **5**.

6.2.2 The method of attachment of lenses to the frame shall be such that the lens will not be inwardly dislodged from its seat when it is subjected to the impact test specified in Appendix D. The lens retaining mounting shall also be such as to accommodate a filter lens, a filter cover and, in between, a gasket of fibre or other durable material approximately 0·25 mm thick and of such inner diameter that it will not restrict the field of vision.

6.2.3 Eyecup type goggles shall be provided with rigidly constructed screw-on types lens retaining rings of metal or plastic. These shall provide a complete clamping action against the lenses.

6.2.4 After the eyecups are subjected to the heat deformation test specified in Appendix type E, the retaining rings shall fit snugly but not tightly and the dimensions shown in Fig. 1 shall not exceed the original dimension by 1 percent for dimensions *A* and *B* and 5 percent for dimension *C*.

6.2.5 The dimensions of filters for goggles shall be as follows:

a) Circular filters and filter covers	$52 \pm^{0}_{2}$ mm diameter
b) One piece window filters	Sufficient material to give unobstructed vision through two circles, each 57 mm diameter at 62 mm centres, taken equally about the vertical centre line of the filter. The outer part of the filter is also required to enclose all points marked *X* on Fig. 2.

Free Standard provided by BIS via BSB Edge Private Limited to Krupaben Brahmbhatt - SURAT(naikassociates110@gmail.com) 116.74.95.151.

6.2.6 When properly adjusted for the wearer, the distance from the pupil of the eye to the inner surface of the filter shall be such as to permit an effective angle of vision of not less than 105 degrees for each eye but shall in no case be less than 14 mm.

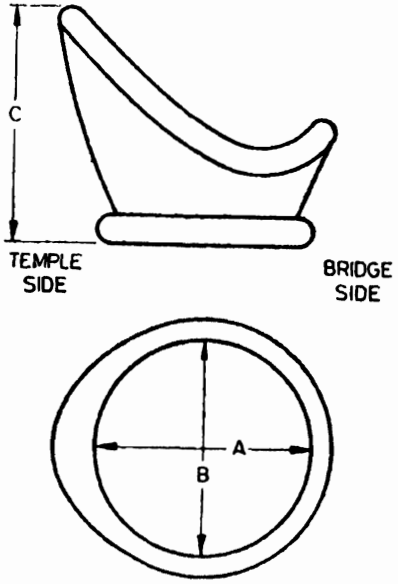

All dimensions in millimetres.

FIG. 1 DIMENSIONS OF EYE AND GOGGLES

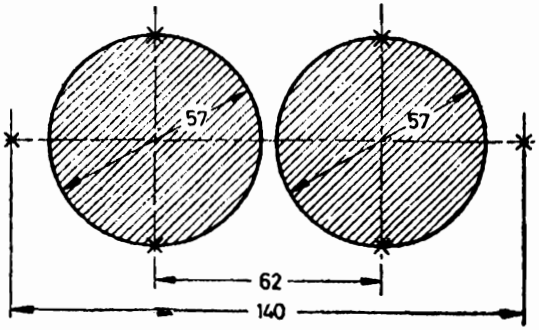

All dimensions in millimetres.

FIG. 2 ONE PIECE WINDOW FILTER

Free Standard provided by BIS via BSB Edge Private Limited to Krupaben Brahmbhatt - SURAT(naikassociates110@gmail.com) 116.74.95.151.

6.2.7 In the eyecup type goggles, the two cups shall be joined by a suitably shaped nose-bridge which shall be adjustable easily by hand to allow accommodation to various pupillary distances.

6.2.8 Headbands shall be capable of holding the equipment in correct position when properly adjusted. They shall be capable of adjustment continuously (not stepwise) without the aid of special tools. The means of adjustment shall be designed to be non-slip.

7. HELMETS AND HAND SHIELDS

7.0 The helmet and hand shield are basically the same in design, the difference being that the helmet has a headgear by which it is supported on the head while the hand shield has, attached to the bottom, a handgrip by which it is held in the hand.

7.1 General Requirements

7.1.1 The helmet and hand shield shall consist of a body, a filter arrangement, suitable headgear in the case of the helmet and a handgrip in the case of the shield.

7.1.2 The body of the helmet and hand shield shall be of such size and shape as to protect the face, top of the head and the neck to a vertical line back of the ears. The body shall be opaque and the interior shall have a permanent dull low-reflecting finish.

7.1.3 The helmet and hand shield shall have in the front of the body a window with filter which allows the wearer to see the welding or cutting operation, yet prevents harmful radiation, sparks or hot metal particles from reaching his face or eyes.

7.1.4 All interior parts shall be free from sharp edges or any irregularities which may be a hazard to the user.

7.1.5 The workmanship shall be such that the helmet and hand shield when used in the normal manner shall not allow direct entry of any particle or radiation to the interior.

7.2 Detailed Requirements

7.2.1 Materials used in the manufacture of helmets and hand shields shall conform to the requirements of **5**.

7.2.2 Any metal parts, including rivets which extend through the material of the body of the helmet or shield, and which may touch the user's head or face, shall not be exposed on the inside of the helmet or shield. Such metal parts shall be insulated by means other than lacquer or varnish.

Free Standard provided by BIS via BSB Edge Private Limited to Krupaben Brahmbhatt - SURAT(naikassociates110@gmail.com) 116.74.95.151.

7.2.3 A window-type filter holder shall hold securely a filter and two filter covers of sizes specified in **7.2.3.1**. The clear opening in the filter holder shall be 95 mm × 70 mm. Permissible tolerance is ±3 mm.

7.2.3.1 The filter and filter cover used shall be of the nominal dimension 105 mm × 80 mm. Permissible tolerance is $\pm {}^{4}_{0}$.

7.2.4 The headgear shall retain the helmet comfortably and firmly in place on the wearer's head but shall permit the helmet body to be tilted back over the head. The headgear shall be adjustable, without the use of tools, so as to permit the setting of the filter in the line of vision of the wearer.

7.2.5 The design of the helmet shall be such that the inner surface of the filter shall be not less than 50 mm from the eyes of the wearer.

7.2.6 Hand shields shall be provided with a handgrip which shall either be fixed inside the shield or be provided with other means of protection for the hand.

8. MARKING

8.1 Goggles, helmets and hand shields covered in this specification shall be marked with the manufacturer's name or trade-mark.

8.1.1 The equipment may also be marked with the ISI Certification Mark.

NOTE — The use of the ISI Certification Mark is governed by the provisions of the Indian Standards Institution (Certification Marks) Act and the Rules and Regulations made thereunder. The ISI Mark on products covered by an Indian Standard conveys the assurance that they have been produced to comply with the requirements of that standard under a well-defined system of inspection, testing and quality control which is devised and supervised by ISI and operated by the producer. ISI marked products are also continuously checked by ISI for conformity to that standard as a further safeguard. Details of conditions under which a licence for the use of the ISI Certification Mark may be granted to manufacturers or processors, may be obtained from the Indian Standards Institution.

APPENDIX A

(*Clause* 0.4)

UPKEEP OF EYE-PROTECTION SERVICE

A-1. SCOPE

A-1.1 This appendix covers the recommendations for securing the efficient upkeep of a service to provide protection for operative's eyes against the harmful effects of radiation in welding operations.

Free Standard provided by BIS via BSB Edge Private Limited to Krupaben Brahmbhatt - SURAT(naikassociates110@gmail.com) 116.74.95.151.

A-2. STORING OF EYE-PROTECTION EQUIPMENT

A-2.1 When not in use eye-protection equipment should be properly stored in some central place. A useful scheme is to install, in each department, a small cabinet containing a series of hooks; under each hook should be placed the name of the employee to whom the device has been assigned. If such provision is not made, it will be found that operatives who do not require to use the devices continuously will place them behind machines or in drawers, lockers or tool kits. As a result, the equipment will sometimes be difficult to locate, and usually will quickly become covered with dust and grime.

A-3. GOGGLE CASE

A-3.1 Goggles are likely to be damaged if carried loose in the pocket or with tools. When carrying cases are provided the operative is more likely to carry the goggles with him and will thus have them at hand when they are required. Provision of substantial cases also indicates to the operative that the goggles are valuable, such items of equipment should not be treated carelessly.

A-4. SPARE PARTS

A-4.1 An adequate supply of spare parts should be kept on hand except where broken devices are periodically returned to the manufacturer for repair.

A-5. REPLACEMENT OF DEFECTIVE DEVICES

A-5.1 The operative should be made responsible for reporting immediately any broken or otherwise defective protective device and for making application to the employer for its repair or replacement. It should be the responsibility of the employer to make suitable arrangements for the proper replacement of protective devices or of defective parts. Employees should be instructed never to wear defective devices.

A-6. INSPECTION

A-6.1 Eye-protection equipment should be inspected frequently to ensure that it is in good condition. In general, the responsibility for reporting defective equipment should rest with the operative (*see* **A-5.**), but complete reliance should not be placed on this procedure for maintaining devices in good condition. The judgement of the operative will often be found not to be in agreement with what may be considered the best practice in the maintenance of the devices. A responsible officer should be detailed to make frequent inspections of eye-protection equipment and to see that all defective devices are either properly repaired or placed out of commission.

Free Standard provided by BIS via BSB Edge Private Limited to Krupaben Brahmbhatt - SURAT(naikassociates110@gmail.com) 116.74.95.151.

A-7. CLEANING AND DISINFECTING

A-7.1 After eye-protection equipment has been used it should be cleaned and disinfected before being issued to another operative. Equipment used continuously by one person should be cleaned and disinfected at regular intervals.

A-7.1.1 Before being disinfected the device should be thoroughly scrubbed and cleaned with soap and hot water to remove grease, dirt or other substances which may prove to be harmful. Where it can be done conveniently devices should be taken apart and the separate parts brushed or sponged in a warm solution of soap and water. They should then be rinsed in warm water and dried. The use of solvents such as carbon tetrachloride, gasoline or naptha is not to be recommended for cleaning eye-protection equipment because of the danger of causing skin irritation. The use of certain of these solvents also introduces a fire hazard into the cleaning operation.

A-7.1.2 After the equipment has been thoroughly cleaned it should be disinfected. Recommended methods of disinfection are as follows, but this shall be such that it has no detrimental effect on the equipment:

a) Immersion in boiling water for a period of 5 minutes,

b) Immersion in live steam for a period of not less than 5 minutes,

c) Immersion in 70 percent solution of ethyl alcohol followed by air drying (not suitable if textile materials are present),

d) Dipping in a solution of 1 part sodium hypochlorite in 10 parts on warm water followed by rinsing in cold water and drying,

e) Irradiation with ultra-violet light (satisfactory only if the rays reach all parts of the device), and

f) A combined sterilisation and cleansing method may be employed by using one of the detergent-antiseptic solutions.

A-7.1.3 Where sodium hypochlorite solution or ethyl alcohol is used as a sterilising agent, it is suggested that the operations be carried out in a closed but ventilated metal container. This will protect the operative from the irritating effect of the fumes. Operatives sterilising with either of these solutions should be provided with rubber gloves, aprons, goggles and protective equipment for the respiratory tract. It is a good practice to provide lanoline, cold cream, vaseline or some similar preparation to be rubbed on the hands and lower arms to replace the natural skin oils that may have been dissolved out by the action of the sterilising compounds.

NOTE — Formalin, either in solution or as a gas, is sometimes used for the disinfection of eye-protection equipment. It has the disadvantage that skin irritation may result if any of the disinfecting agent ramains on the equipment when it is put to use after treatment.

Free Standard provided by BIS via BSB Edge Private Limited to Krupaben Brahmbhatt - SURAT(naikassociates110@gmail.com) 116.74.95.151.

A-8. COMPLAINTS OF UNCOMFORTABLE DEVICES

A-8.1 All complaints of uncomfortable equipment should be investigated carefully by a responsible officer. It is possible that imperfect filters may have escaped detection, that the devices may not have been adjusted correctly, that they may need cleaning, or may not be of the correct type.

A-9. FITTING AND DEVICES

A-9.1 It should be the duty of the employer to ensure that each operative is provided with properly fitting protective devices, and it is desirable to detail a responsible officer to supervise such fitting. Time spent in adjusting the devices to the facial contours of the operative and in making sure that the eyelashes do not touch the filters, will help to secure his co-operation in the eye-protection scheme adopted in the works.

Devices which are fixed in position by means of a headband should be worn in such a manner that the band passes around the head above the ears, and then down towards the base of the skull, with just enough tension to hold the device comfortably in its proper position. The headband should not be worn so that it passes around the widest part of the head. A tight-fitting headband may cause headaches and may be responsible for undue perspiration. The headband will be at approximately the correct tension if the wearer can place two fingers beneath the band without appreciable increase in the pressure of the device against the face or other point of pressure.

A-10. OPERATIVES REQUIRING PRESCRIPTION LENSES

A-10.1 Many operatives normally wear vision-correcting spectacles. Such spectacles may usually be worn without discomfort when hand shields, face masks or helmets are used, but may interfere with the wearing of eyecup or spectacle goggles. In the latter cases the goggles should be of such a type that they may be worn comfortably over vision-correcting spectacles. Alternatively, the filter provided should be ground to the same prescription as the vision-correcting spectacles. In such a case care should be taken when fitting the filters to avoid rotation on their axes.

A-11. FOGGING AND UNCOMFORTABLE PERSPIRATION

A-11.1 Important factors contributing to the operative dispensing with the use of a protective device are the fogging of the filters and the inability to remove perspiration from the eyes. To overcome these disadvantages, operatives should be provided with sweat pads to be worn on the forehead, and with suitable anti-fogging compounds for application to the filters. One such compound consists of glycerine soap in the form of a pencil. In some cases one application of anti-fogging compound every three or four hours will be sufficient; in other cases, particularly where the operative is

Free Standard provided by BIS via BSB Edge Private Limited to Krupaben Brahmbhatt - SURAT(naikassociates110@gmail.com) 116.74.95.151.

subjected to frequent changes in temperature, applications every hour, or even more frequently, may be necessary. Anti-fogging compound should be applied lightly and the filters polished with a clean cloth so that there is no interference with vision. A suggested composition for glycerine soap pencils is given in **A-11.1.1.**

A-11.1.1 *Preparation of Glycerine Soap Pencils* — Take 325 ml of glycerine, heat to boiling point and dissolve in it 50 g of stick sodium hydroxide. Add the solution, with constant stirring, to 625 g of stearic acid melted in a large kettle. When action has ceased pour the mixture into moulds. If softer pencils are required for winter use the proportion of glycerine should be increased; in general, however, pencils prepared as given above will be suitable for both summer and winter conditions.

The above quantities should make about 500 pencils.

A-12. RE-CONDITIONING OF FILTERS

A-12.1 Reconditioning of filters by immersing them in acid or by grinding to remove pitted substances is not to be recommended. If the foreign substance is dissolved out by the acid the pit will remain in the filter and cause distortion. If the filters are ground they are weakened and may not give full protection. It is safer to replace used filters with new filters.

A-13. COVER GLASSES

A-13.1 For reasons of economy it is desirable to provide filters with cover glasses which, on becoming pitted, may be discarded and new ones inserted. The life of the more expensive filter is thus lengthened.

A-14. ISSUE OF ORDER

A-14.1 If it is decided that protective devices should be used in connection with any particular operation, an order should be issued by an executive of the company stating the hazards involved and specifying the type of device to be used.

A-15. EDUCATION IN USE OF DEVICES

A-15.1 The operatives should be instructed before taking up duties, and at regular intervals thereafter, in the purpose and importance of using eye-protection equipment.

A-16. EXAMPLE BY EXECUTIVES

A-16.1 It will be valuable in securing the use of eye protective devices by the operatives if all persons, regardless of their position in the organization or of the fact that they may be visitors to the plant, wear suitable protective equipment when in the vicinity of any operation likely to produce hazards to vision from injurious radiation or flying particles.

Free Standard provided by BIS via BSB Edge Private Limited to Krupaben Brahmbhatt - SURAT(naikassociates110@gmail.com) 116.74.95.151.

APPENDIX B

(*Clause* 5.1)

TEST FOR RESISTANCE TO CORROSION OF METAL COMPONENTS

B-1. PREPARATION

B-1.1 The metal components are prepared by first removing all contamination, particularly oil and grease, from the surfaces.

B-2. METHOD

B-2.1 The metal parts are immersed in a boiling 10 percent (by weight) aqueous solution of sodium chloride for a period of 15 minutes. The components on being removed from this solution are immediately immersed in a 10 percent (by weight) aqueous solution of sodium chloride at room temperature for a further 15 minutes. After removal from this cold solution, without having the adhering liquid wiped off, they are allowed to dry for 24 hours at room temperature. The metal parts are then rinsed in lukewarm water and allowed to dry after which they are visually examined.

APPENDIX C

(*Clause* 5.4)

TEST FOR FLAMMABILITY

C-1. PREPARATION

C-1.1 A specimen approximately 125 mm long, 15 mm wide and of a thickness equal to the thinnest section intended to be used in the equipment is cut from the sample of the material in such a manner that the strip is as flat as possible. Lines are drawn across the specimen at 15 mm intervals measured from one end along the 125 mm length. The other end is clamped in a rigid support so that the long axis of the specimen is horizontal. An alcohol lamp or gas burner with a flame 10 to 20 mm in height is placed under the free end of the specimen, and adjusted so that the flame tip is just in contact with the material under test.

Free Standard provided by BIS via BSB Edge Private Limited to Krupaben Brahmbhatt - SURAT(naikassociates110@gmail.com) 116.74.95.151.

C-2. METHOD

C-2.1 A stop-watch is started when the flame is placed in contact with the specimen. At the end of 10 seconds the flame is removed and the specimen allowed to burn. The rate of burning per minute is observed from the marked lines.

C-2.2 Three specimens are tested and the rate of burning is calculated from the average of the results of the tests.

APPENDIX D

(*Clause* 6.2.2)

IMPACT TEST FOR GOGGLE LENSES

D-1. IMPACT TEST

D-1.1 An eyecup with lens shall be supported on a wooden block of such size as to fit into the eyecup securely without touching the lens. A 22 mm steel ball weighing approximately 44 g, shall be freely dropped from a height of 1·25 m on to the horizontal outer surface of the lens.

APPENDIX E

(*Clause* 6.2.4)

HEAT DEFORMATION TEST FOR EYECUP GOGGLES

E-1. Goggles shall be tested for heat deformation by mounting the eyecup on a wooden block with the facial edge of the cup downwards and the filter and cover glass horizontal. The bridge side of the eyecup shall be fastened to the block by means of a piece of wire. The eyecup shall rest on the edge of the block which has been rounded to a radius of 5 mm. A 680 weight shall be suspended from the eyecup by means of a piece of wire, one end

Free Standard provided by BIS via BSB Edge Private Limited to Krupaben Brahmbhatt - SURAT(naikassociates110@gmail.com) 116.74.95.151.

of which is attached to the weight and the other end fastened in the temple side headband hole (*see* Fig. 3). The whole assembly shall be placed for one hour in a forced-draft oven maintained at 70° ± 10°C. At the end of this period the assembly shall be removed from the oven and allowed to cool, after which the dimensions *A*, *B* and *C* shown in Fig. 1 shall be measured. Dimensions *A* and *B* shall not exceed the original dimensions by more than 1 percent and dimension *C* shall not exceed the original dimensions by more than 5 percent. The retaining ring and the cup of the eyecup shall show a close, but not tight, fit.

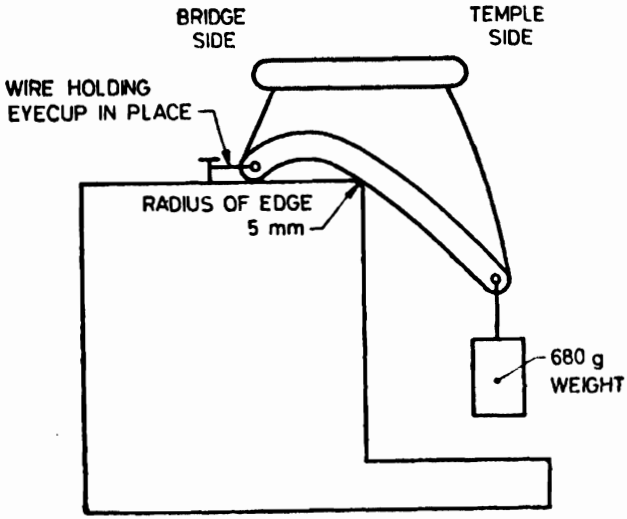

FIG. 3 APPARATUS FOR HEAT DEFORMATION OF GOGGLES

Free Standard provided by BIS via BSB Edge Private Limited to Krupaben Brahmbhatt - SURAT(naikassociates110@gmail.com) 116.74.95.151.

BUREAU OF INDIAN STANDARDS

Headquarters:
Manak Bhavan, 9 Bahadur Shah Zafar Marg, NEW DELHI 110002
Telephones : 331 01 31, 331 13 75 Telegrams : Manaksanstha
(Common to all offices)

Regional Offices:		*Telephones*
Central	: Manak Bhavan, 9 Bahadur Shah Zafar Marg, NEW DELHI-110002	331 01 31 331 13 75
*Eastern	: 1/14 C.I.T. Scheme VII M, V. I. P. Road, Maniktola, CALCUTTA 700054	36 24 99
Northern	: SCO 445-446, Sector 35-C, CHANDIGARH 160036	2 18 43 3 16 41
Southern	: C. I. T. Campus, MADRAS 600113	41 24 42 41 25 19 41 29 16
†Western	: Manakalaya, E9 MIDC, Marol, Andheri (East), BOMBAY 400093	6 32 92 95
Branch Offices:		
'Pushpak' Nurmohamed Shaikh Marg, Khanpur, AHMEDABAD 380001		2 63 48 2 63 49
‡Peenya Industrial Area, 1st Stage, Bangalore Tumkur Road BANGALORE 560058		38 49 55 38 49 56
Gangotri Complex, 5th Floor, Bhadbhada Road, T. T. Nagar, BHOPAL 462003		6 67 16
Plot No. 82/83, Lewis Road, BHUBANESHWAR 751002		5 36 27
53/5, Ward No. 29, R. G. Barua Road, 5th Byelane, GUWAHATI 781003		3 31 77
5-8-56C L. N. Gupta Marg (Nampally Station Road), HYDERABAD 500001		23 10 83
R14 Yudhister Marg, C Scheme, JAIPUR 302005		6 34 71 6 98 32
117/418 B Sarvodaya Nagar, KANPUR 208005		21 68 76 21 82 92
Patliputra Industrial Estate, PATNA 800013		6 23 05
T.C. No. 14/1421, University P.O., Palayam TRIVANDRUM 695035		6 21 04 6 21 17
Inspection Office (With Sale Point) :		
Pushpanjali, 1st Floor, 205-A West High Court Road, Shankar Nagar Square, NAGPUR 440010		2 51 71
Institution of Engineers (India) Building, 1332 Shivaji Nagar, PUNE 411005		5 24 35

*Sales Office in Calcutta is at 5 Chowringhee Approach, P.O. Princep Street, Calcutta 700072 — 27 68 00

†Sales Office in Bombay is at Novelty Chambers, Grant Road, Bombay 400007 — 89 65 28

‡Sales Office in Bangalore is at Unity Building, Narasimharaja Square Bangalore 560002 — 22 36 71

Printed at Simco Printing Press, Delhi, India